THIS PRINT IS PROVIDED ON A RESTRICTED BASIS AND IS NOT TO BE USED IN ANY WAY DETERMINAL TO THE INTEREST OF HALSANG

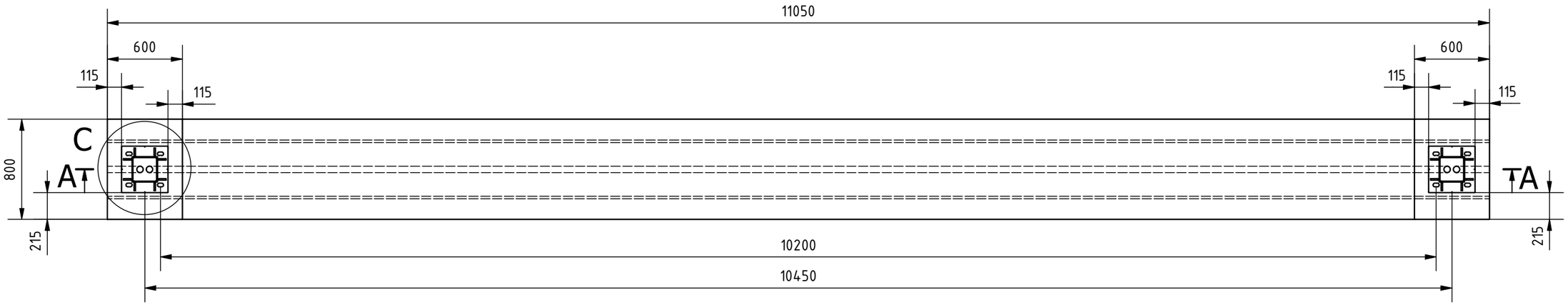

A-A (1 : 35)

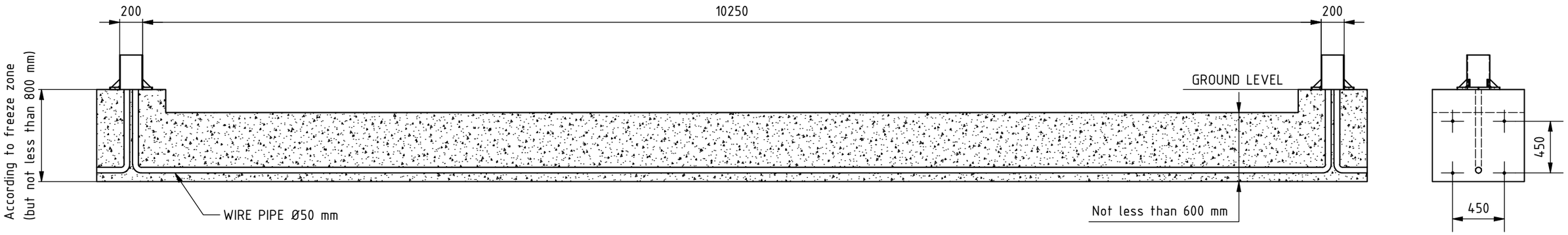

C (1 : 15)

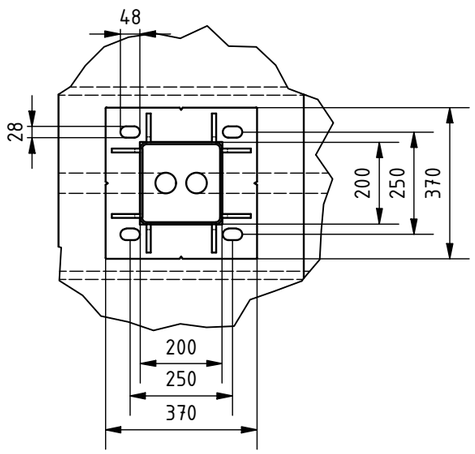

Remarks:

1. All dimensions in mm.
2. Prepare foundation with concrete class C25. Concrete must be reinforced with reinforcement bars or fibres and flat on top.
3. For gate installation put gateposts baskets inside concrete or use anchors M24x400 or longer. Anchors must be over concrete surface between 70 - 100 mm .
4. Placing gate on or in foundation depending on detailed gate size - to be chosen on installation site.
5. This is suggested foundation plan. Dimensions, reinforcement, anchoring.

HALSANG	Remarks			
Designed by K. Rączkowski	Scale 1 : 35	Format A3	Data 28.03.2022	Sheet numer 1/1
Edited by	Height ---	Width ---	Material ---	Mass ---
Number 03754.0000	Drawing Frigg 2W 10000 Foundation			Rev. A